International Journal for Modern Trends in Science and Technology
Volume: 03, Issue No: 05, May 2017
ISSN: 2455-3778
http://www.ijmtst.com

IOT Based Smart Power Management Systems

Kiruthiga S[1] | Balasubramanian G[2]

[1]PG Scholar, Department of EEE, Arasu Engineering College, Kumbakonam, India.
[2]Assistant Professor, Department of EEE, Arasu Engineering College, Kumbakonam, India.

To Cite this Article
Kiruthiga S and Balasubramanian G, "IOT Based Smart Power Management Systems", *International Journal for Modern Trends in Science and Technology*, Vol. 03, Issue 05, May 2017, pp. 56-61.

ABSTRACT

This paper presents IOT based smart power management system. The system principally monitors and controls an electrical parameters such as voltage and current and subsequently calculates the power consumed. The main goal of this project is to develop a newly equipped well designed prototype for consumers to provide secured power. The innovation of this system is controlling mechanism implementation. For controlling a parameters, it sends a intimation to the user when the parameter exceeds their predefined values. The controlling process of electrical parameters that can be programmed using a ATMEGA32 controller and monitor even via mobile phone or PC from anywhere in the world. . To provide more confidentiality to the consumer, Trust Security Privacy (TSP) algorithm is used.To provide a high degree of security user or authenticator id is given by server to consumers. Due to that users only access their corresponding loads. Also, the proposed system is a user authentication, economical and easily operable. The system is a flexible and low cost and accordingly can save electricity outflow due to that we can save electricity expense of the consumers.To avoid a power theft, Power Theft Detection Algorithm (PTDA) is proposed and simulations are carried out in proteus software. Thus, the real-time monitoring of the electrical parameters can be observed over a website.

KEYWORDS: *IoT, PTDA, TSP, confidentiality, security, sensors, authentication, proteus*

I. INTRODUCTION

Amit Sachan "GSM BASED AUTOMATED EMBEDDED SYSTEM FOR MONITORING AND CONTROLLING OF SMART GRID" International Journal of Electrical, Computer, Energetic, Electronic and Communication Engineering Vol:7, No:12, 2013. The purpose of this paper is to acquire the remote electrical parameters like Voltage, Current, and Frequency from Smart grid and send these real time values over GSM network using GSM Modem/phone along with temperature at power station. This system also send SMS alerts whenever the Circuit Breaker trips or whenever the Voltage or Current exceeds the predefined limits. Rong Jiang "ENERGY THEFT DETECTION ISSUES FOR ADVANCED METERING INFRASTRUCTURE IN SMART GRID" tsinghua science and technology ISSN 10070214 01/12 pp105-120 Volume 19, Number 2, April 2014.With the proliferation of smart grid research, the Advanced Metering Infrastructure (AMI) has become the first ubiquitous and fixed computing platform. However, due to the unique characteristics of AMI, such as complex network structure, resource-constrained s sue to make AMI secure. Energy theft is one of the most important concerns related to the smart grid implementation. It is estimated that utility companies lose more than $25 billion every year due to energy theft around the world. To address this challenge, in this paper, we discuss the background of AMI and identify major security requirements that AMI should meet.

Improvements in power electronics technologies and utilization of renewable energy sources for power generation have given rise to the use of distributed generation and create concept of smart grids and micro grids to overcome rapid increase in the demands for electricity and depletion of conventional energy sources. Monitoring of power system parameters like voltage, current and power at distribution level is crucial for efficient functioning of smart grid. The power exchange between the smart grid and the utility grid happens by switching. This switching needs complete synchronism between the smart grid and the utility grid. An economic & reliable communication backbone along with accurate monitoring system is essential.

II. PROPOSED SYSTEM

Architecture of IOT

The communication architecture of IOT isdivided into three layers, the first layer is called sensor layer, which is composed by sensors, on-line monitoring terminals and wireless routers, the sensors are responsible for sensing the physical information, the on-line monitoring terminals are responsible for gathering the monitoring data from the sensors, and the wireless routers are responsible for building the multi hop wireless network, through which the monitoring terminals can exchange data; the second layer is called fiber communication layer, the fibers in the OPGW cable are used as the communication path, the data gathered by monitoring terminals is send to the sink terminal connected to the OPGW by wireless router, and transfer to the datacenter; the third layer is the composed by GPRS network and the Beidou (COMPASS) navigationsatellite system (CNSS), it is used in those place where there is no OPGW or the OPGW does not workwell, in this layer the data gathered by monitoring terminals is send to the sink terminal equipped withGPRS module and CNSS module, the GPRS module is the priority choice for data transfer and the CNSSmodule only work when the GPRS module can't work as normal. module only work when the GPRS module can't work as normal.

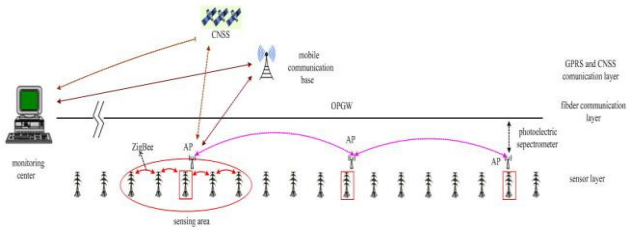

Fig2.1 Layer operation of IOT

Sensor layer

The full perception on the physical world is the basic character of IOT. Because the transmission line extends as far as hundreds, even thousands of kilometers, the topographies are varied and complicated, so the objects need monitoring are of great number, such as the pull and temperature of the transmission line, the temperature and humidity of the microclimate around the transmission line, etc

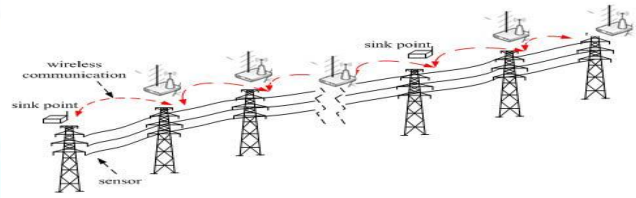

Fig2.2 Architecture of IOT in data transfer

Fiber communication layer

The OPGW is a combination of fiber and overhead ground line, it is an important developmentdirection of special optical cables, and is widely used with the development of power system's opticalfiber communication network. The OPGW is set on the top of the towers like other overhead ground line,can be worked as the communication line and the ground line.

GPRS and CNSS communication layer

In some places, the OPGW does not allowed to access, the breakage of the OPGW cores is often occurred in extreme low temperature, and the fiber communication can't be used, under these situation n,the GPRS module and CNSS module fixed on the monitoring terminals will start working.

Zigbee :

Zigbee Functionality Test Result This process is for checking the functionality and testing how far the Zigbee transmitter can connect with Zigbee receiver. Before that, the Xbee module need to be configured before it can be used as serial communication medium. The X-CTU software has several other functions beside configure the Xbee module. Each main tab has its own function to develop the communication by using the Xbee module.

Block diagram for simulation

Transmitter

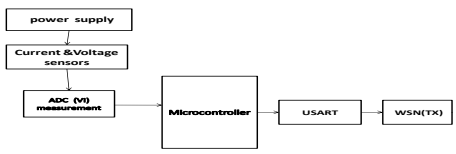

Fig2.3 Transmitter section

Receiver

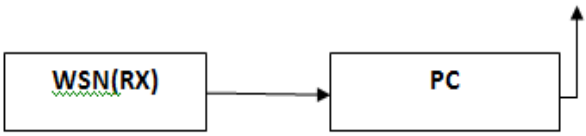

Fig2.4 Receiver section

Hardware block diagram

Transmitter

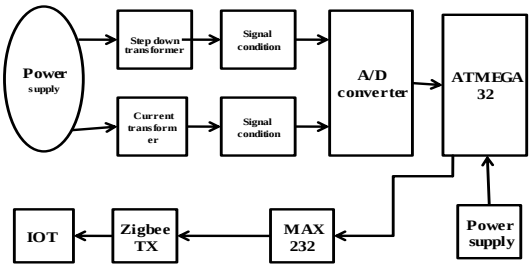

Fig2.5 Transmitter section

Receiver

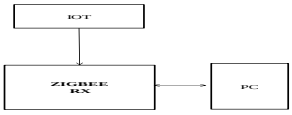

Fig2.6 Receiver section

Trust, security and privacy

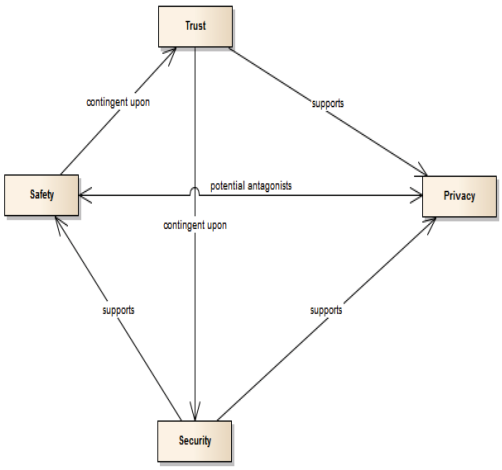

Fig2.7 Flow Chart for Security

Confidentiality, personal rights to privacy, data security and integrity come at a cost. The question is: what is the cost benefit ratio when looking at the benefit the solution provides. The individual willing to forfeit his or her rights in order to gain the benefit Google and Apple have been able to take great liberties with personal data in return for costly and reduce the benefits or increase costs of mandatory IoT solutions.

III. SIMULATION RESULTS

Circuit diagram for simulation

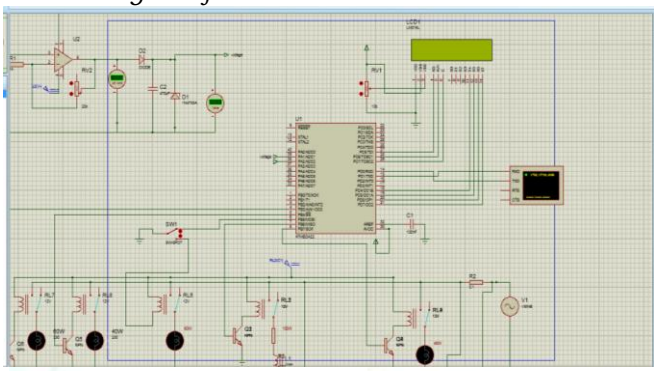

Initial state

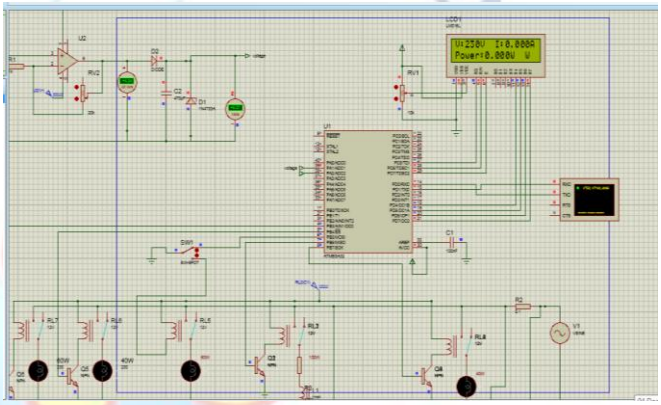

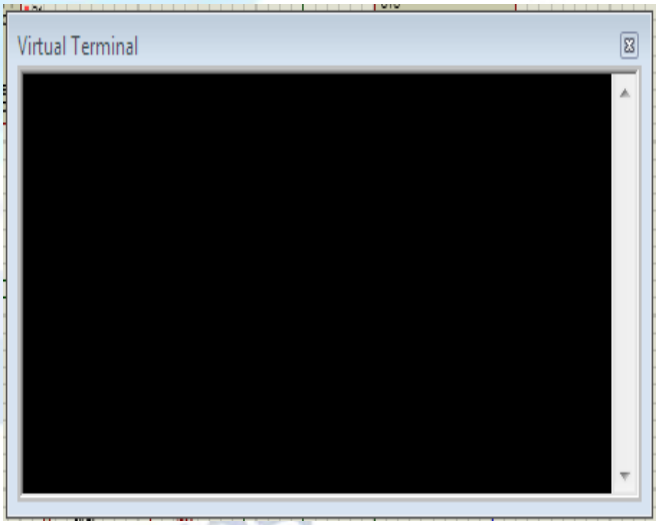

For initial state

Waveform for initial state

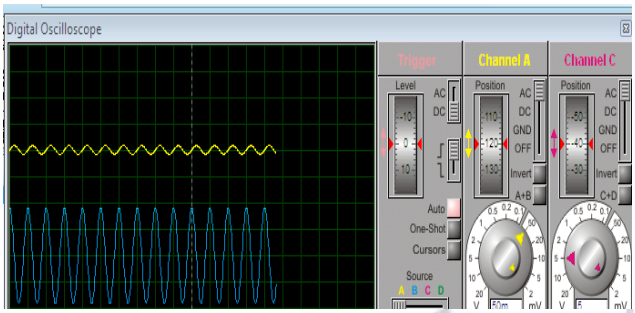

Load A

For load A

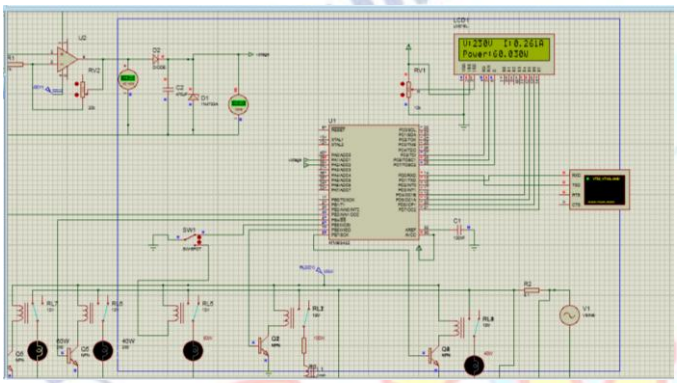

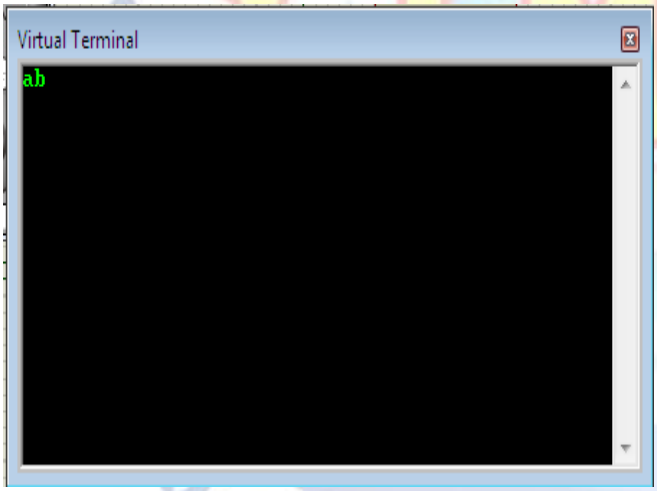

For load A

Waveform for load A

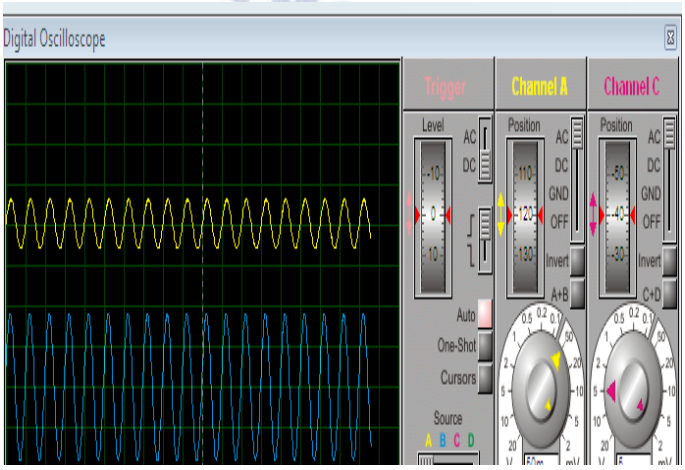

Load B

For load-B

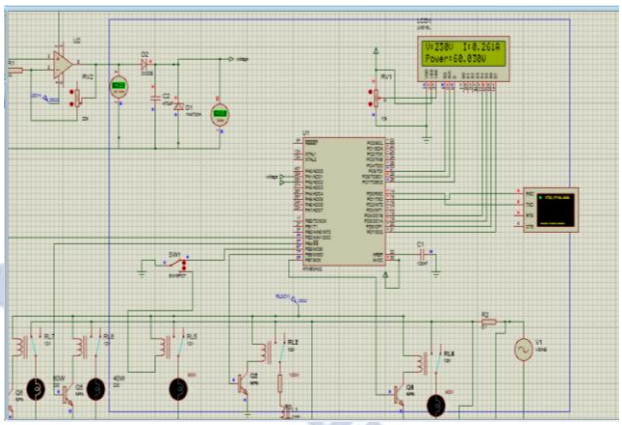

For load B

Waveform for load B

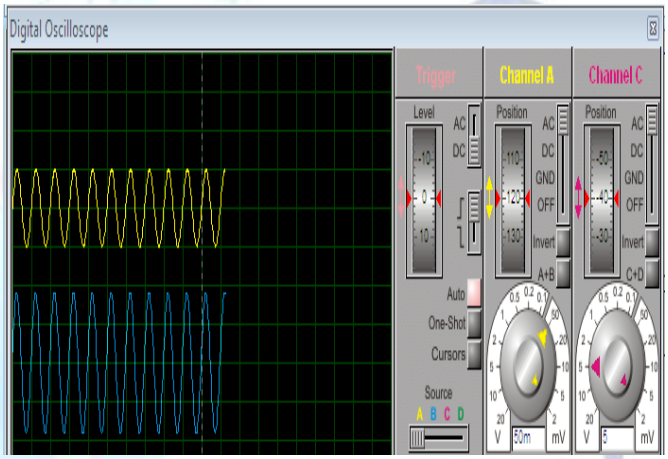

Load C

For load-C

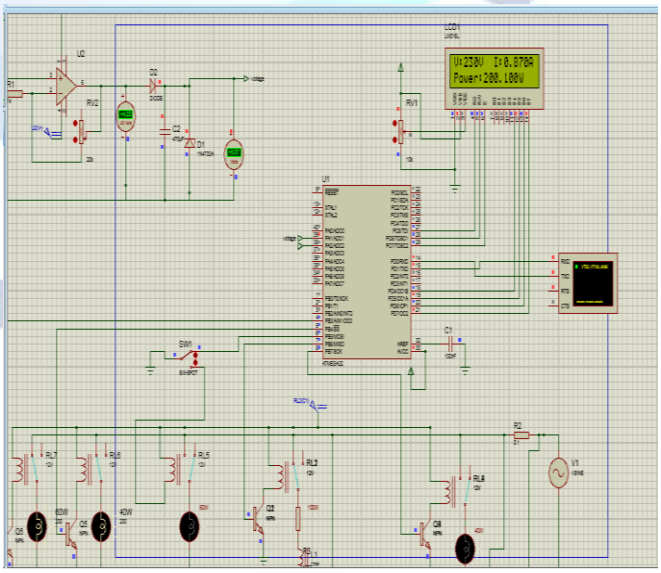

For load C

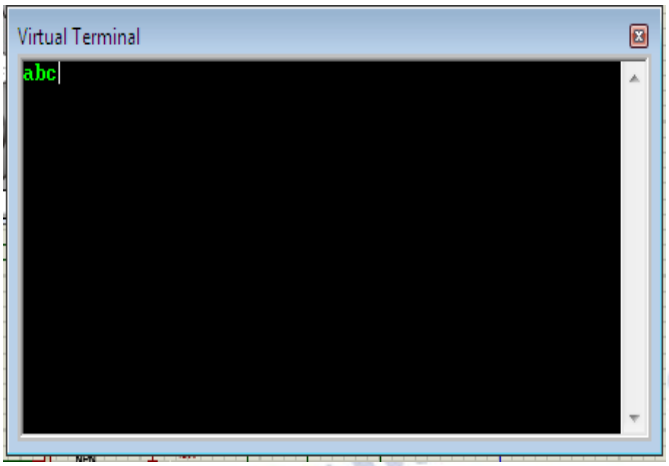

Waveform for load C

Load D

For load-D

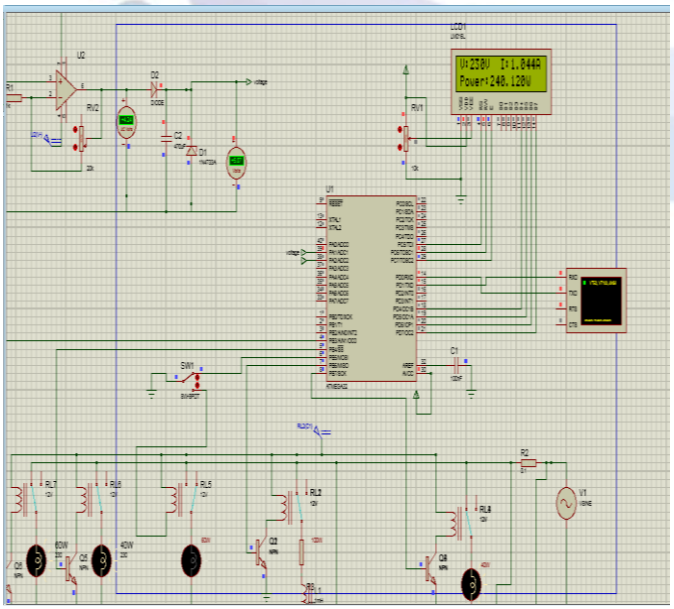

For load D

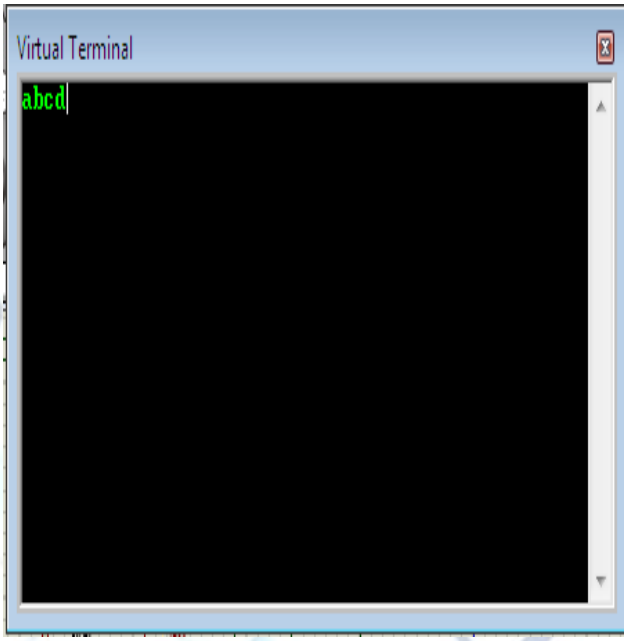

Waveform for load D

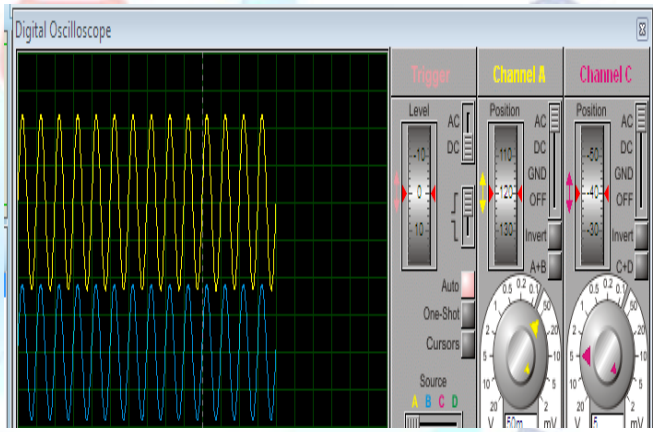

Theft Detection

For theft detection

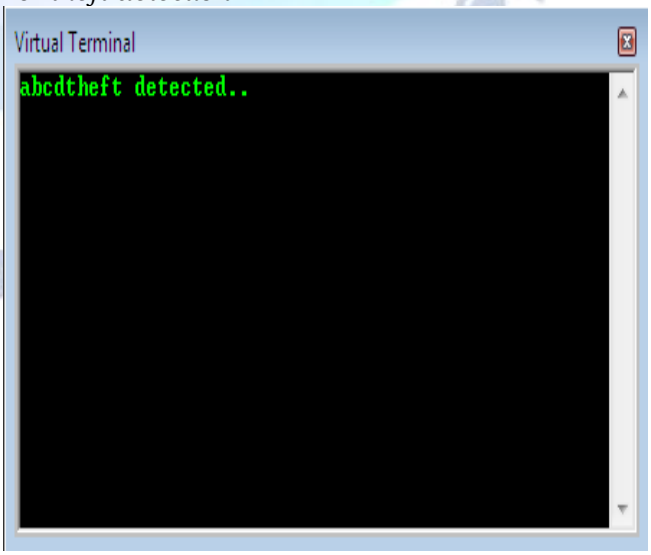

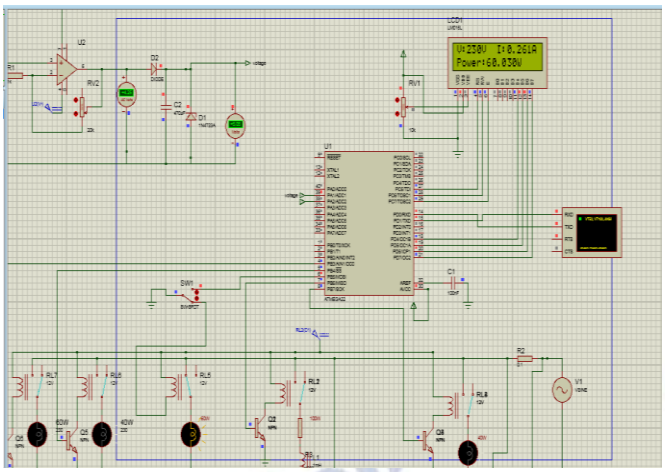

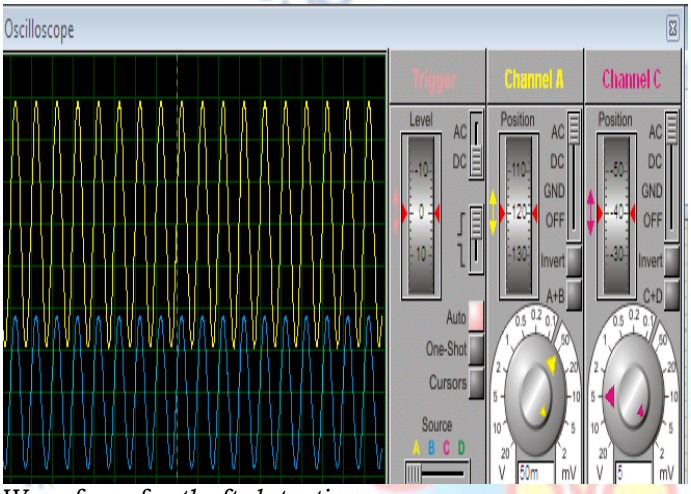

Waveform for theft detection

Tabulation

S. No	Load	Current (Ampere)	Voltage (volts)	Power (Watts)
1	A	0.26	230	60.030
2	B	0.435	230	100.050
3	C	0.870	230	200.00
4	D	1.040	230	240.120
5	Theft	0.522	230	120.060

The values for current, voltage and power are tabulated for corresponding loads.

IV. CONCLUSION

The real-time monitoring of the electrical appliances can be viewed through a website. The processed voltage, current values are displayed on LCD screen, Which can be controlled through application A Proteus is software for microprocessor simulation, schematic capture, and printed circuit board design. It is developed by Lab center Electronics. The sensor networks are programmed with various user interfaces suitable for users of varying ability and for expert users such that the system can be maintained easily. The current and voltage of a transformer is monitored continuously using wireless sensors. When the hacker tries to theft a load it sent a message notification to a customer. The simulation is carried out in Proteus software and simulations are showed.

4.1 Applications

It is widely used for military applications .

It can also applicable to power plants.

It secures the system from malicious attacks

Advantages

The sensing module is calibrated and tested for the accuracy.

It is clear from the experimentations that the wireless sensor networks may be successfully employed to smart grids for monitoring purpose.

Reliable and low cost WSN.

Less labourios.

REFERENCES

[1] Amit Sachan "GSM BASED AUTOMATED EMBEDDED SYSTEM FOR MONITORING AND CONTROLLING OF SMART GRID" International Journal of Electrical, Computer, Energetic, Electronic and Communication Engineering Vol:7, No:12, 2013.

[2] Rong Jiang "ENERGY THEFT DETECTION ISSUES FOR ADVANCED METERING INFRASTRUCTURE IN SMART GRID" tsinghua science and technology ISSNll100702141l01/12llpp105-120 Volume 19, Number 2, April 2014.